NOT FOR SALE




# GAT-X105 STRIKE GUNDAM

## REFINE VERSION

## General and Technical Data

**Model number:** GAT-X105
**Code name:** Strike Gundam
**Unit type:** prototype all-purpose multi-mode mobile suit
**Manufacturer:** Morgenroete, Inc
**Operator(s):** Earth Alliance (Atlantic Federation); Three Ships Alliance
**First deployment:** 25 January C.E. 71
**Accommodation:** pilot only, in standard cockpit in torso
**Dimensions:** head height 17.72 meters
**Weight:** max gross weight 64.8 metric tons
**Armor materials:** unknown
**Powerplant:** ultracompact energy battery, power output rating unknown
**Equipment and design features:** sensors, range unknown; Phase Shift (PS) armor; hardpoints for mounting Striker packs
**Fixed armaments:** 2 x "Igelstellung" 75mm multi-barrel CIWS, fire-linked, mounted in head; 2 x "Armor Schneider" combat knife, stored in hip armor, hand-carried in use; shield, mounted on left armV

## Color Guide

| | | |
|---|---|---|
| A-H | WHITE | 8 |
| I-Q | BLACK | 9 |
| R | BLUE | 1 |
| S | RED | 1 |
| T | YELLOW | 1 |

MODELING BY CREAM-BREAD

A white

MODELING BY CREAM-BREAD /GAT-X105 STRIKE GUNDAM

| INFORMATION | |
|---|---|
| 1–9 | HEAD |

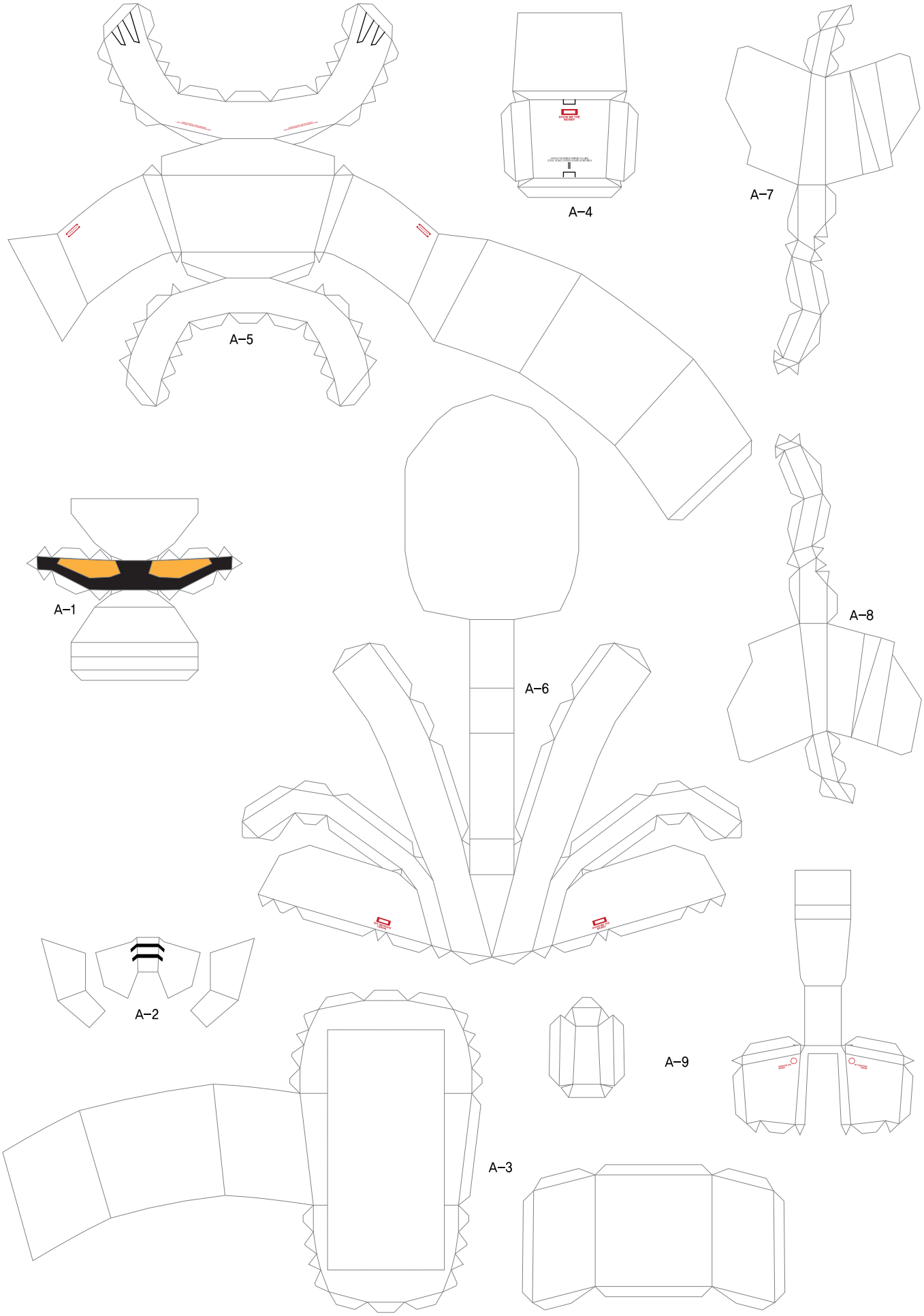

**B white** MODELING BY CREAM-BREAD **/GAT-X105 STRIKE GUNDAM**

| INFORMATION | |
|---|---|
| 1–11 | HEAD |
| 12–15 | CHEST |

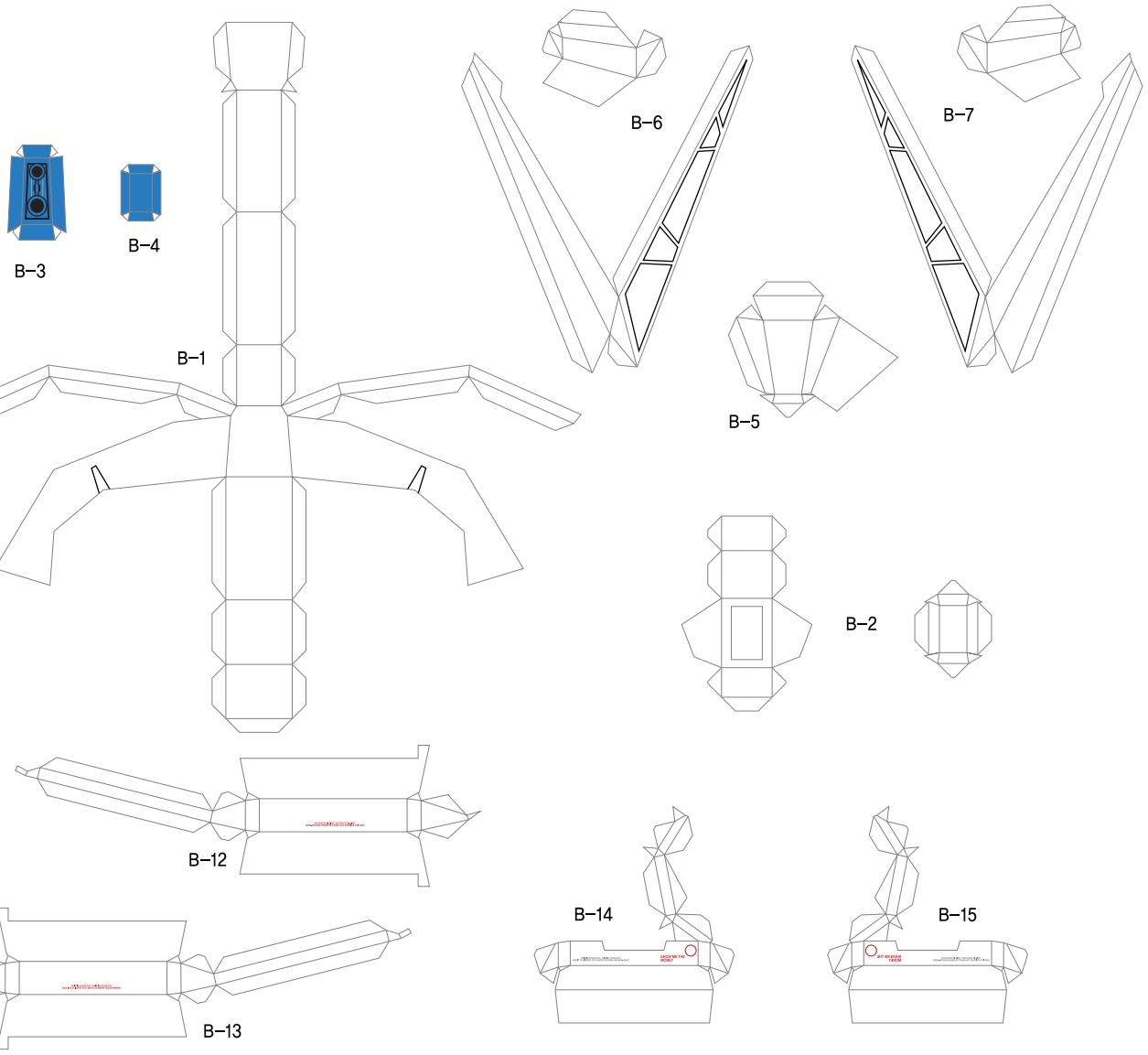





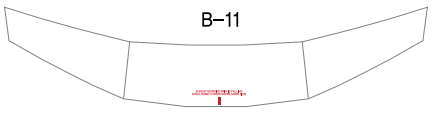

| INFORMATION |
| --- |
| 1–17 PELVIS |

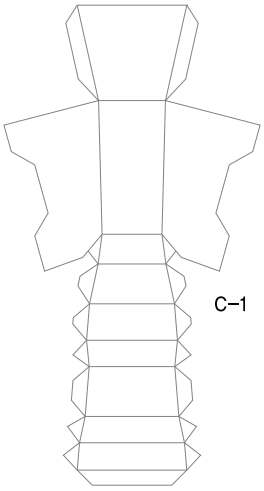
C–1

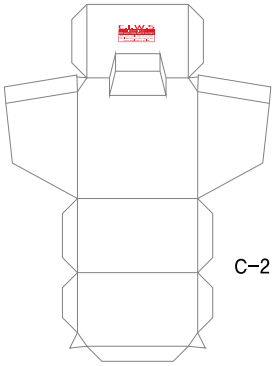
C–2

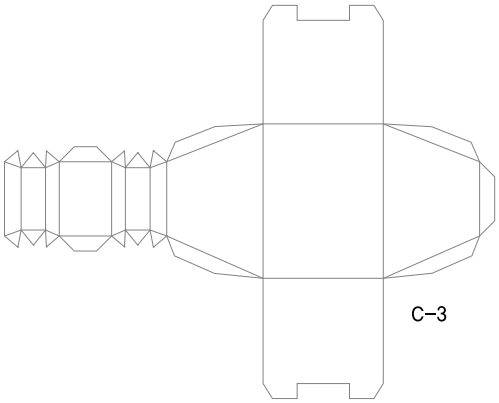
C–3

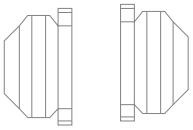
C–6

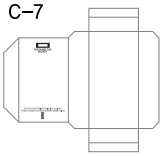
C–7


C–8

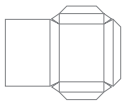
C–9

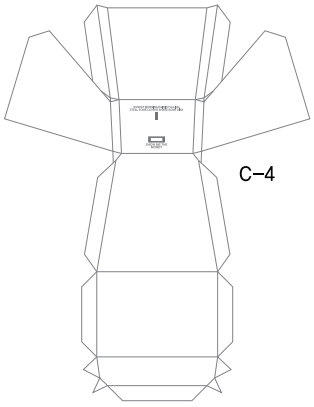
C–4

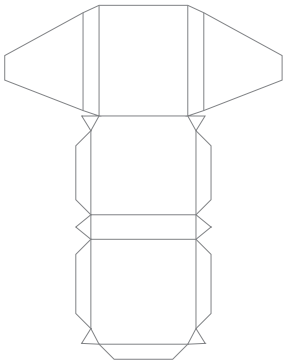
C–5

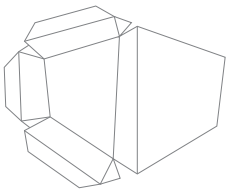
C–10

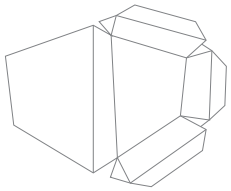
C–11

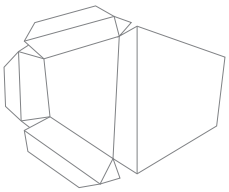

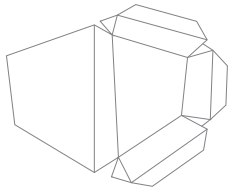

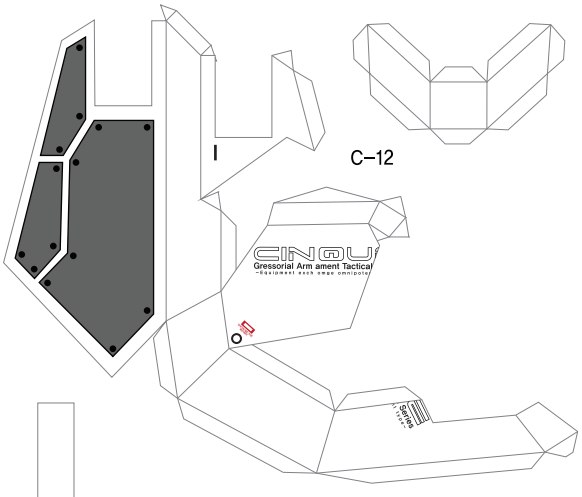

C–12

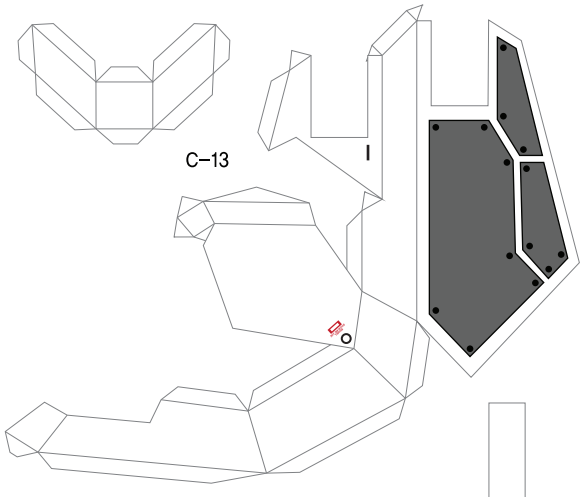
C–13

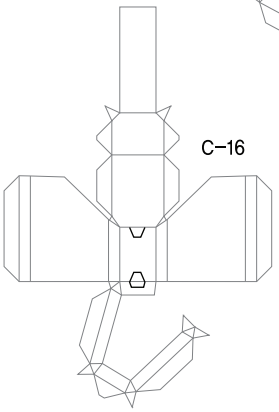
C–16



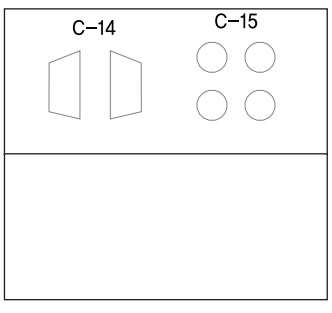
C–14 C–15



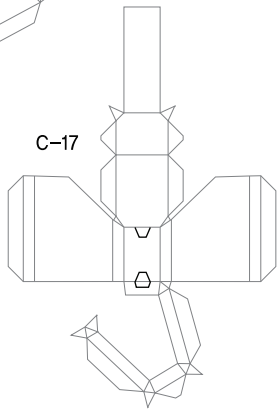
C–17

| INFORMATION | |
|---|---|
| 1–10 | PELVIS |

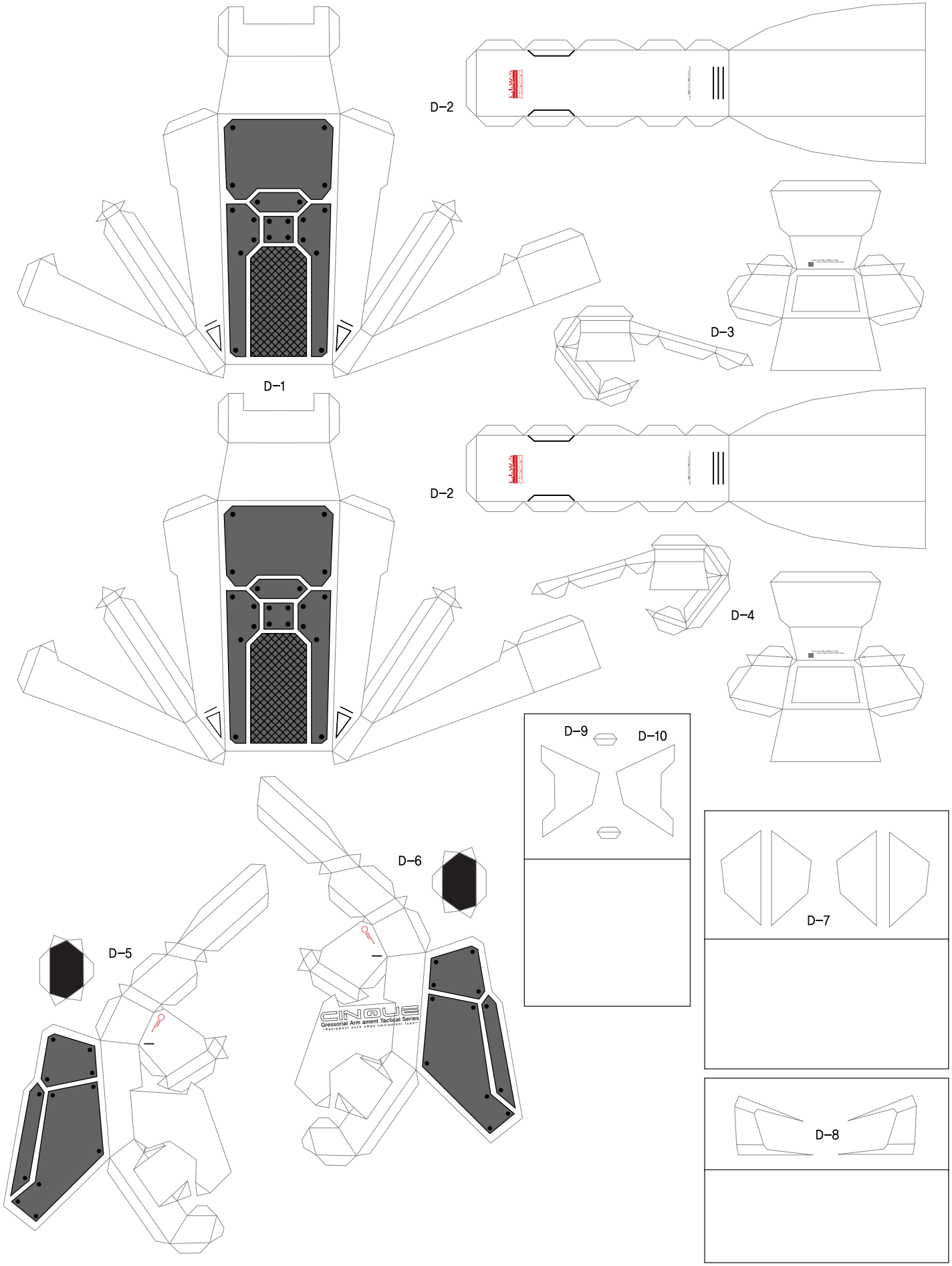

| INFORMATION |
| --- |
| 1–20 R.LEG |

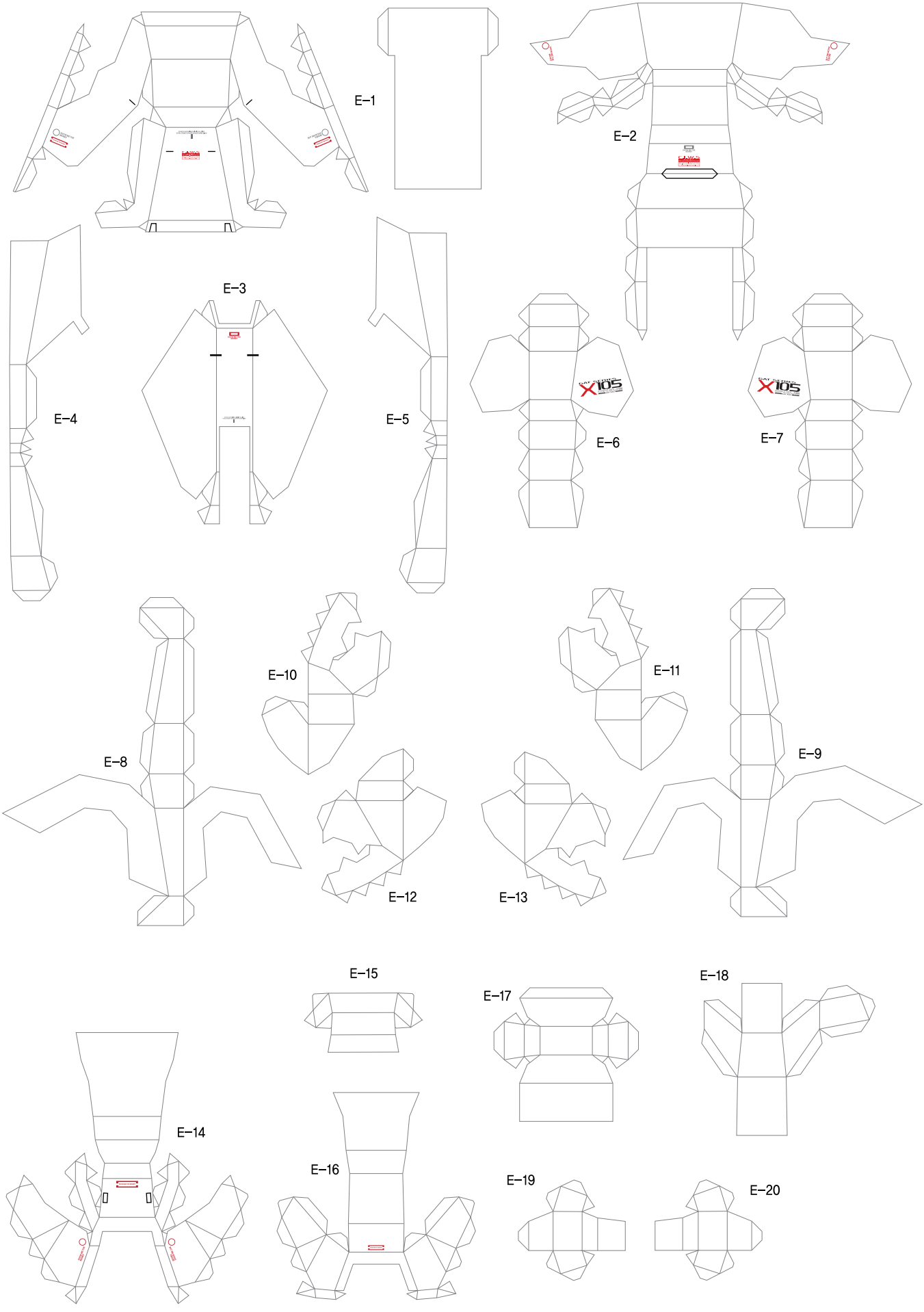

F white

MODELING BY CREAM-BREAD /GAT-X 105 STRIKE GUNDAM

| INFORMATION | |
|---|---|
| 1–20 | L.LEG |

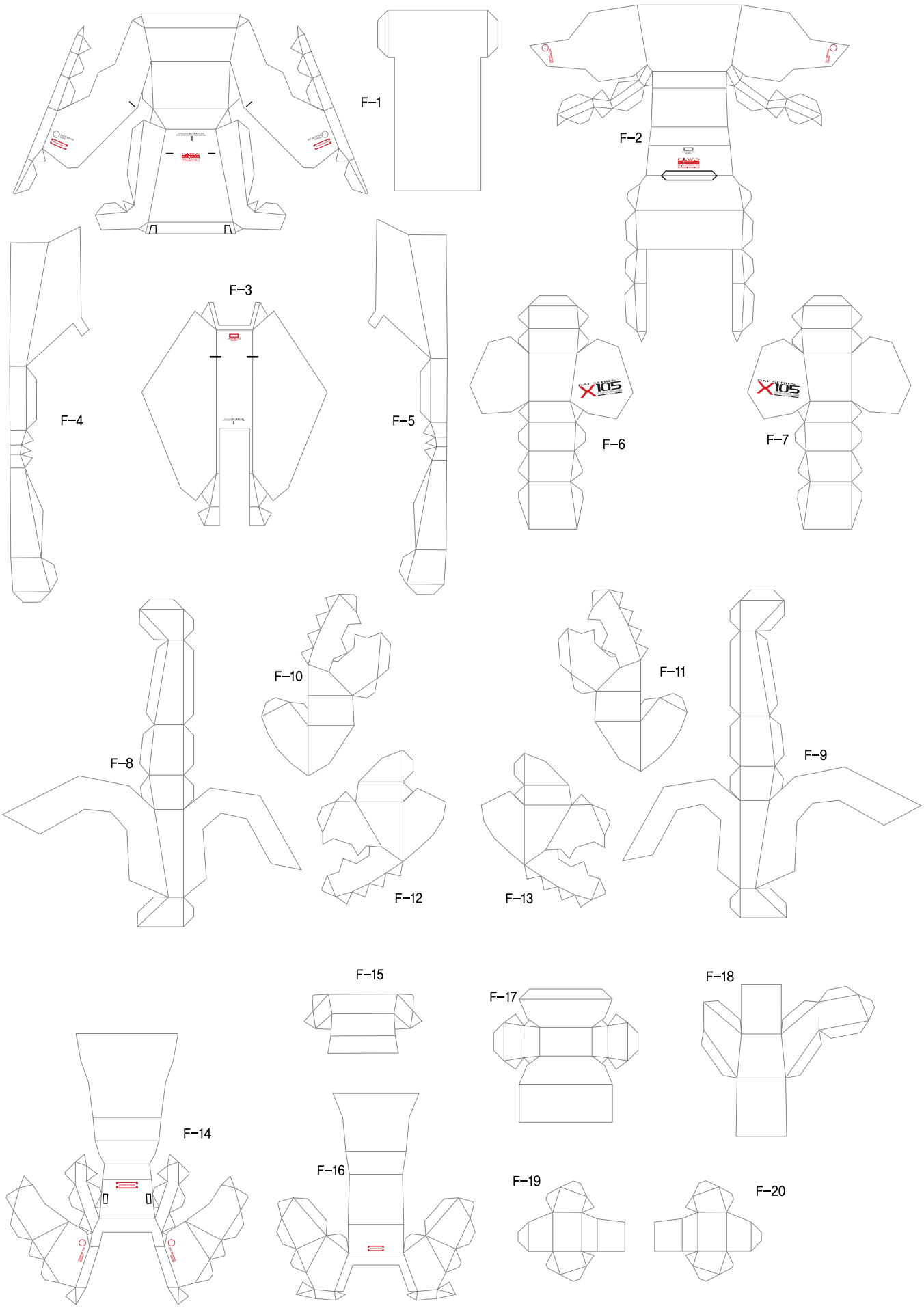

**G white** MODELING BY CREAM-BREAD /GAT-X105 STRIKE GUNDAM

| INFORMATION | |
|---|---|
| 1–4 | R.LEG |
| 5–21 | R.ARM |

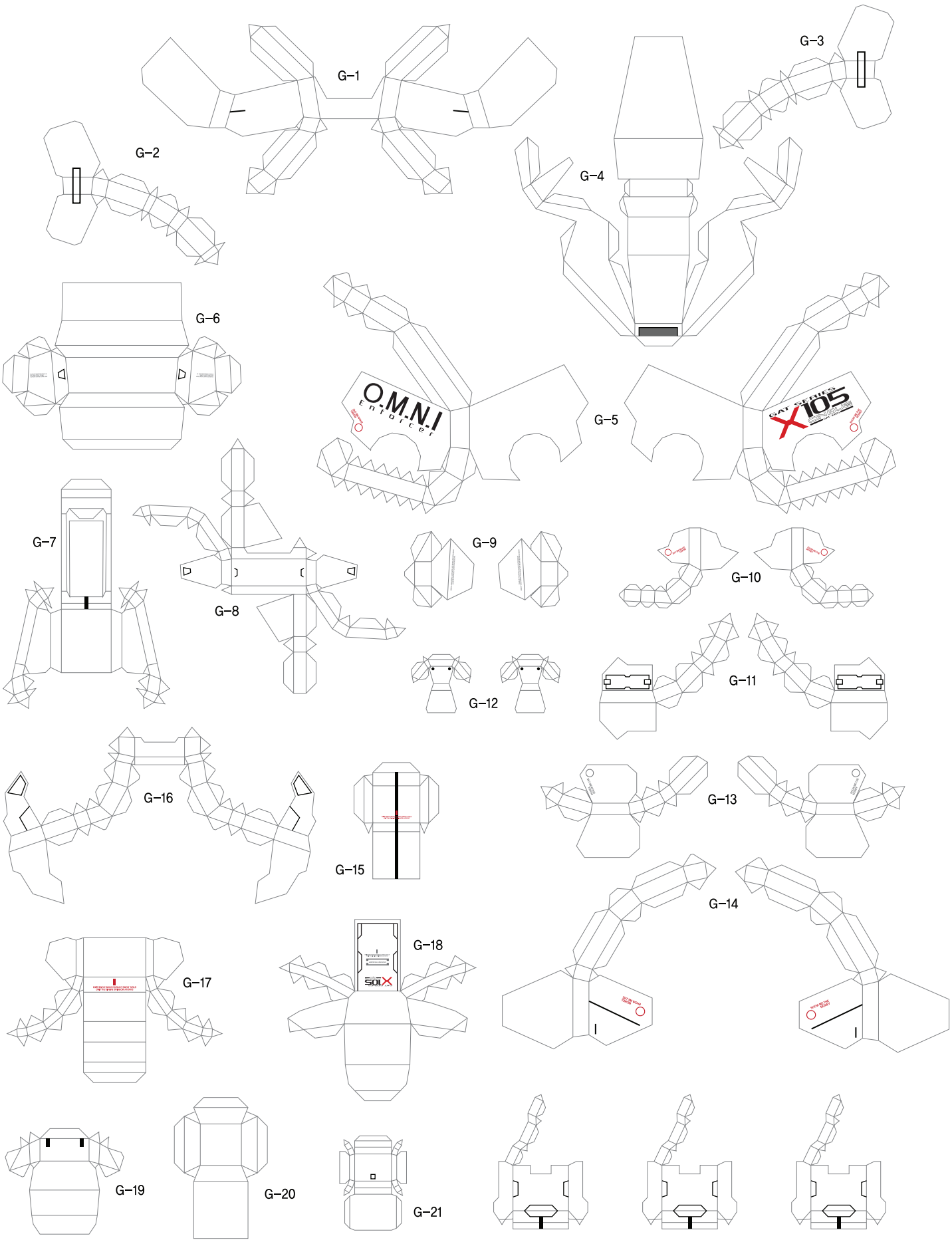

**H white** MODELING BY CREAM-BREAD /GAT-X105 STRIKE GUNDAM

| INFORMATION | |
|---|---|
| 1–4 | L.LEG |
| 5–21 | L.ARM |

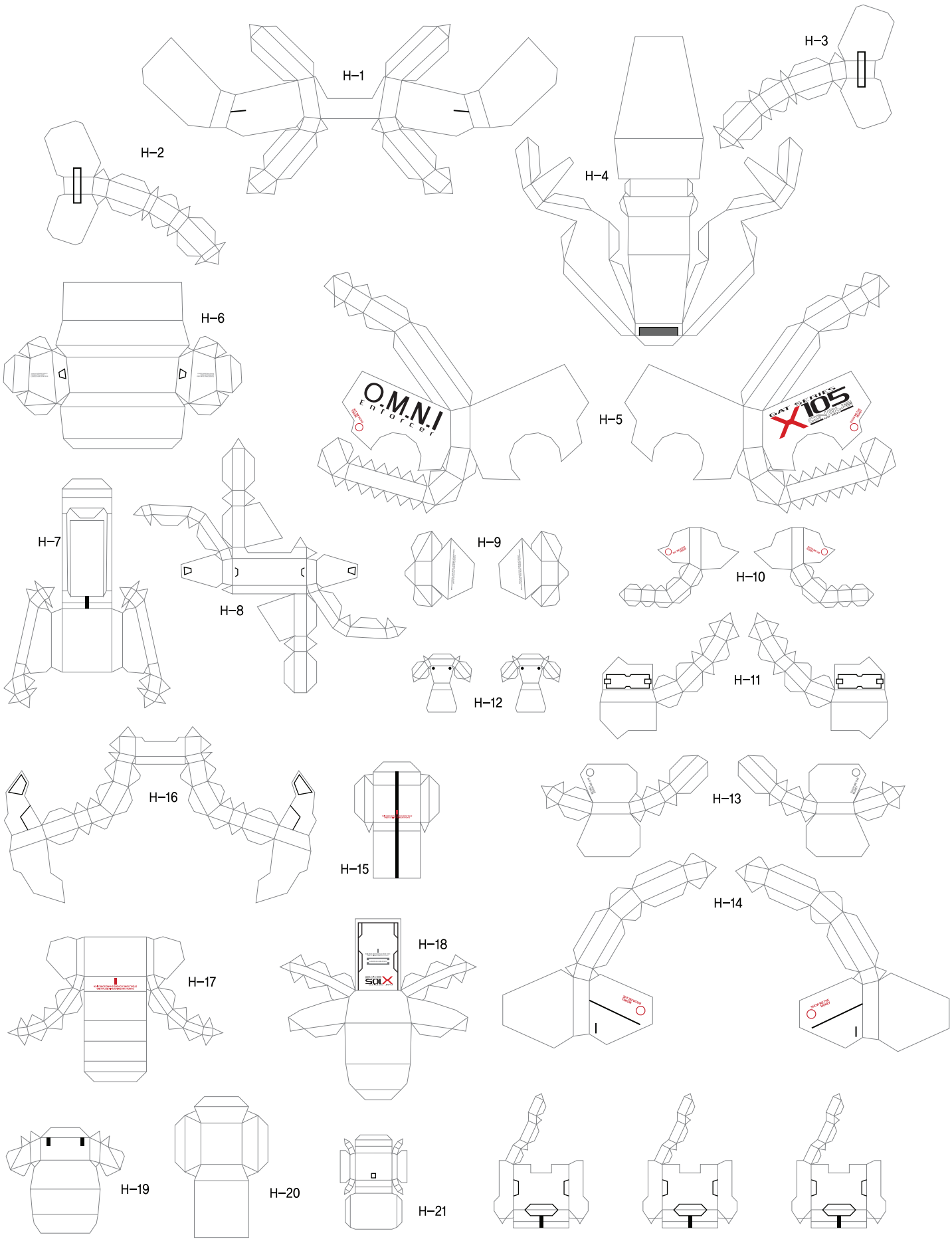

| INFORMATION | |
|---|---|
| 1–8 | HEAD |
| 9–15 | CHEST |

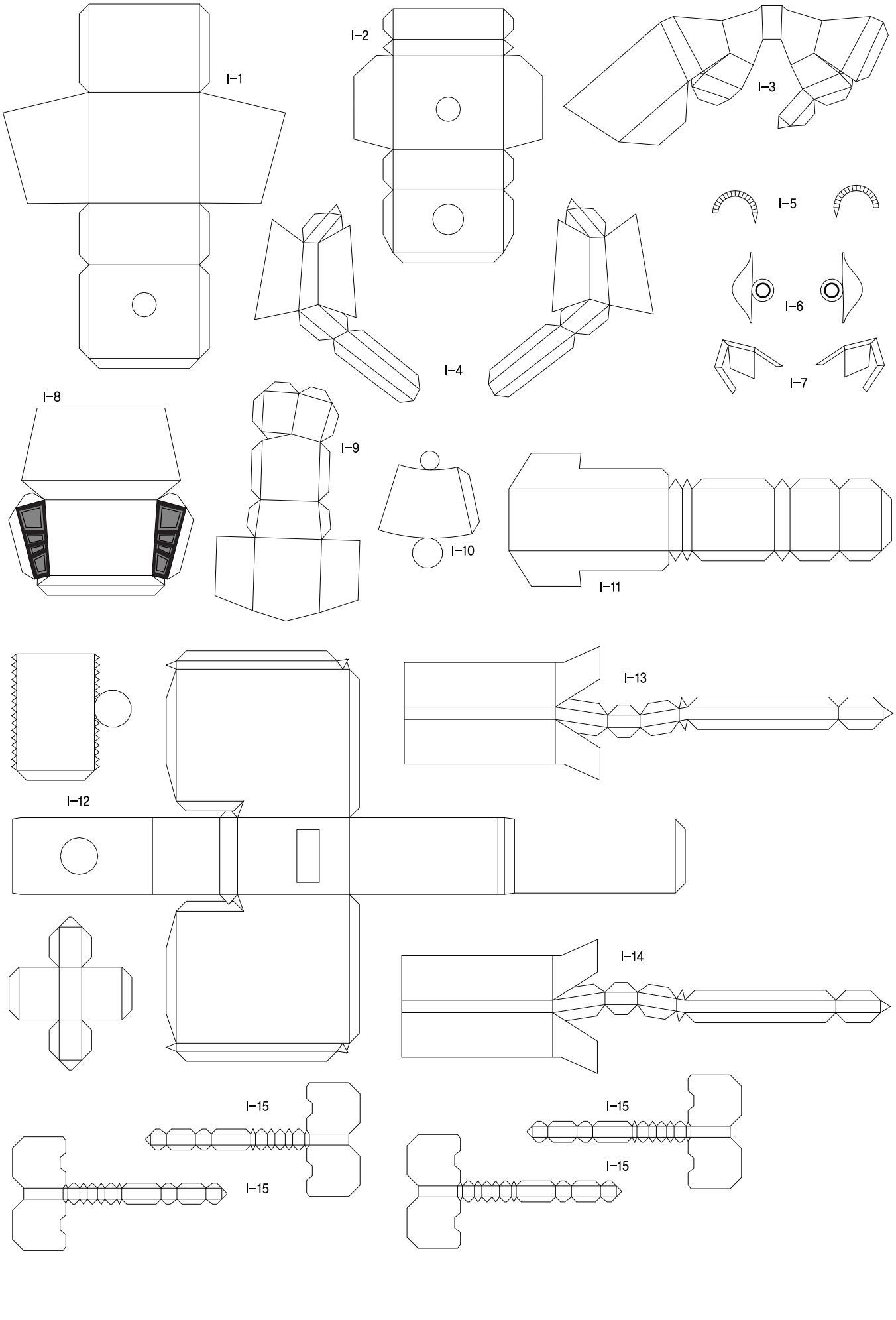

INFORMATION
1–17 CHEST

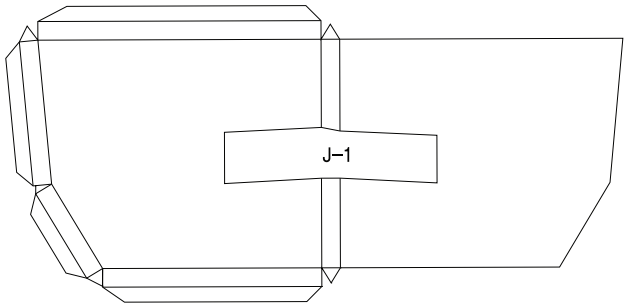


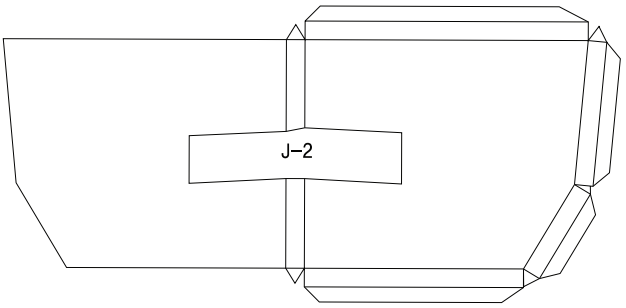


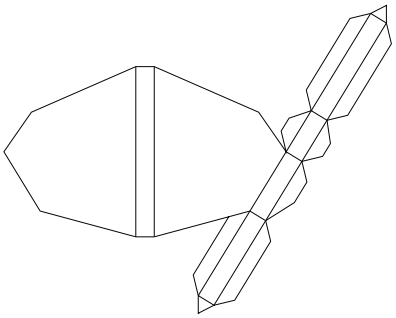

J–3

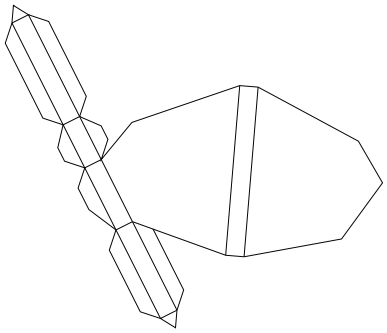

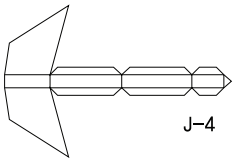

J–4

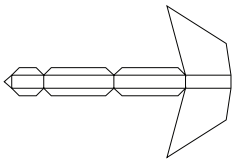

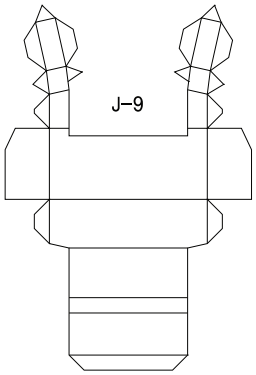

J–9

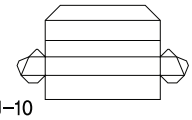

J–10

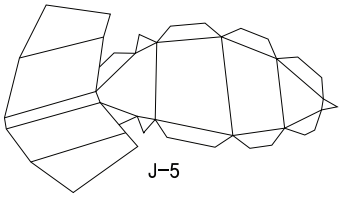

J–5

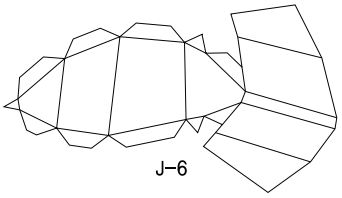

J–6

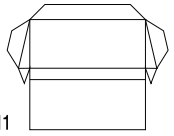

J–11

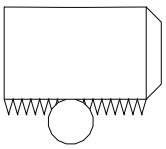

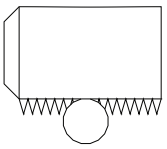

J–7

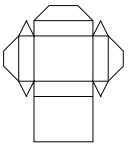

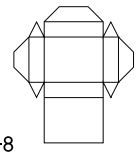

J–8

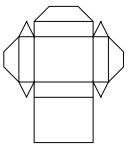

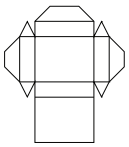

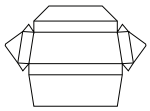

J–12

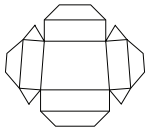

J–13

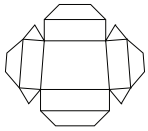

J–14




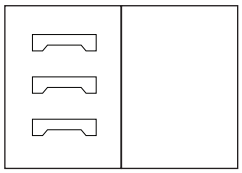

J–16

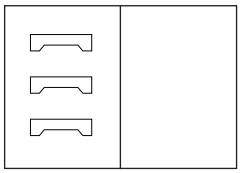

J–17

INFORMATION
1–20 PELVIS

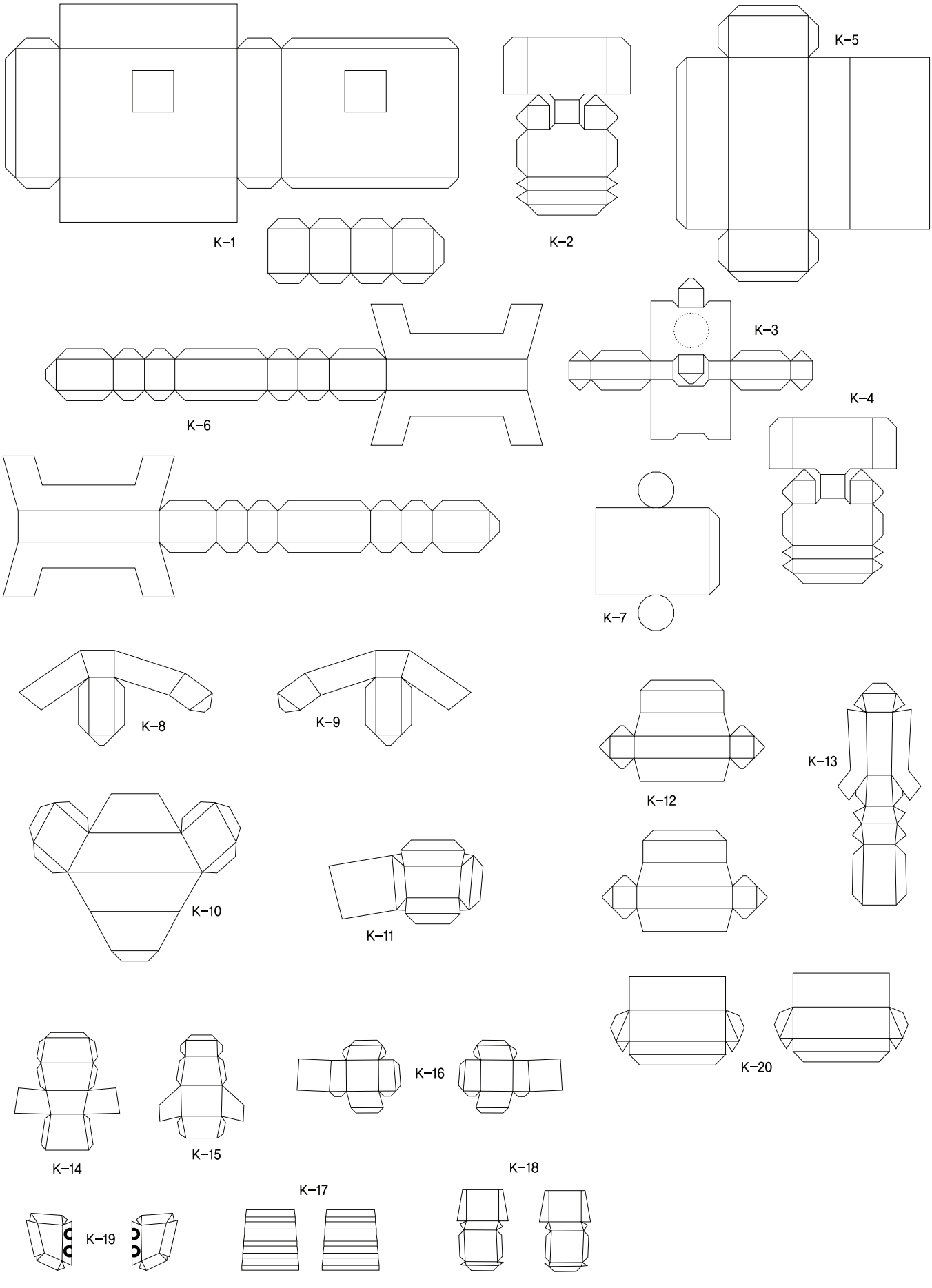

| INFORMATION |
| --- |
| 1–15 R.LEG |

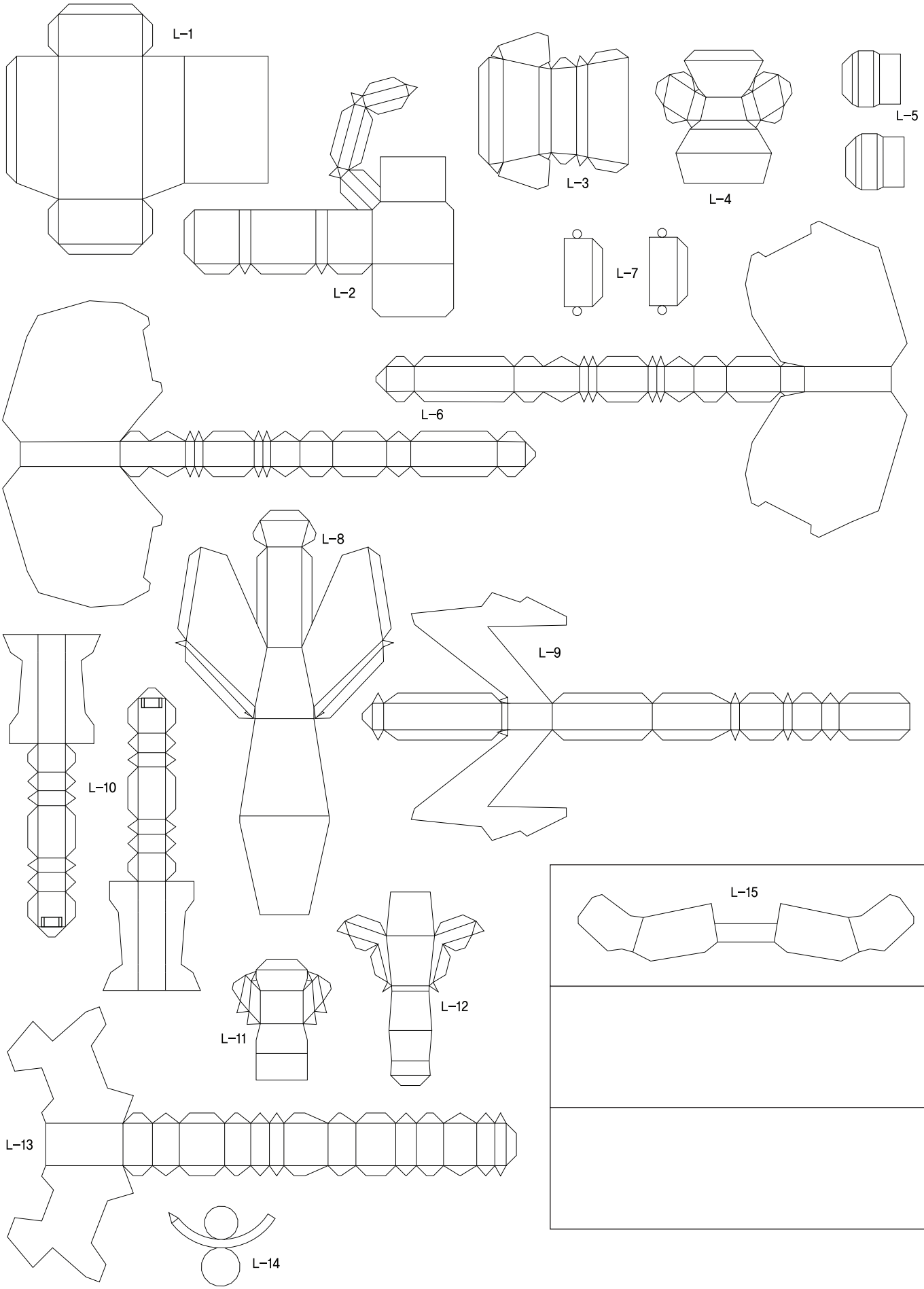

| INFORMATION |
| --- |
| 1–15 L.LEG |

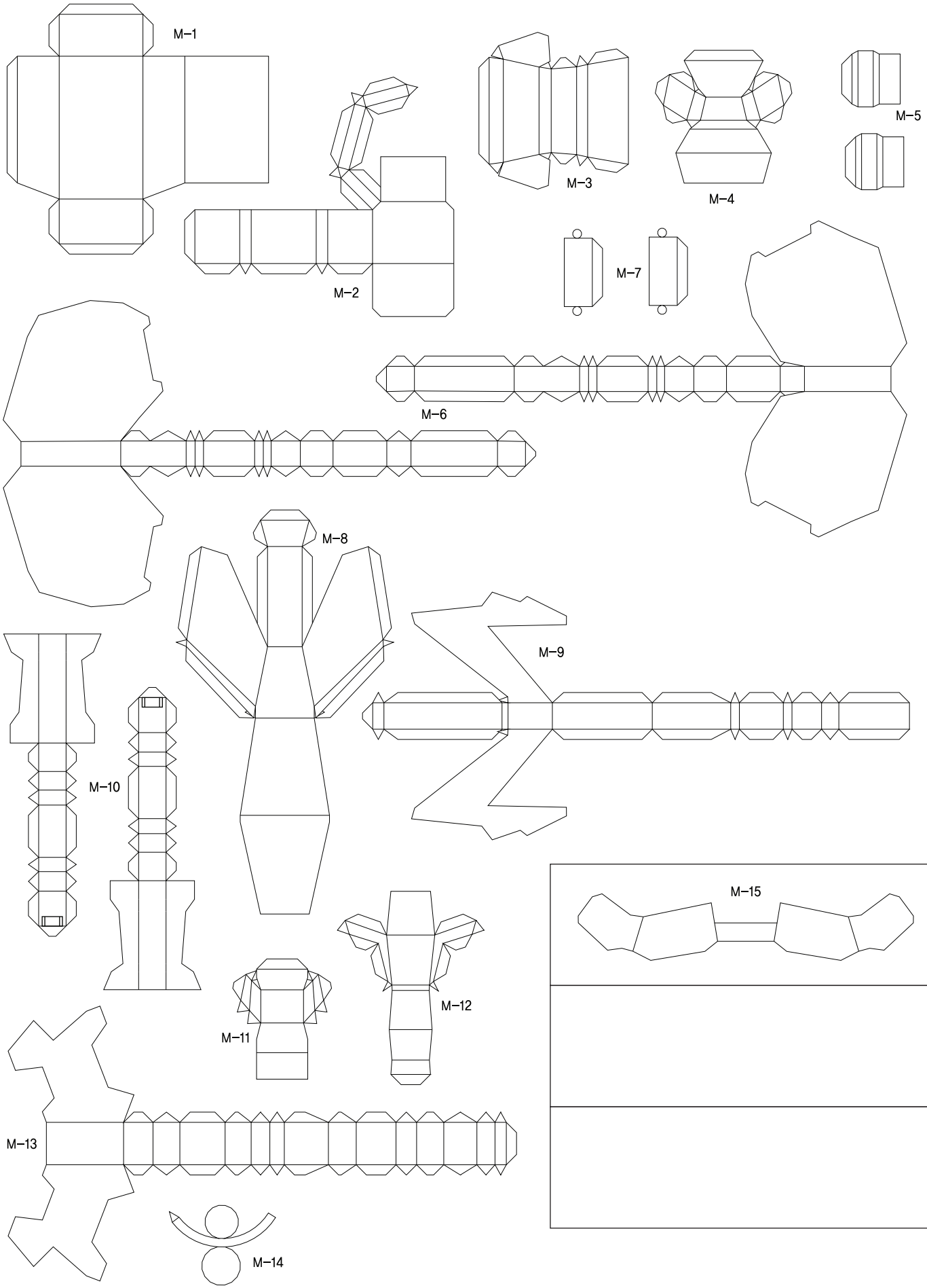

N black MODELING BY CREAM-BREAD /GAT-X105 STRIKE GUNDAM

| INFORMATION | |
|---|---|
| 1–8 | R.LEG |
| 9–16 | L.LEG |

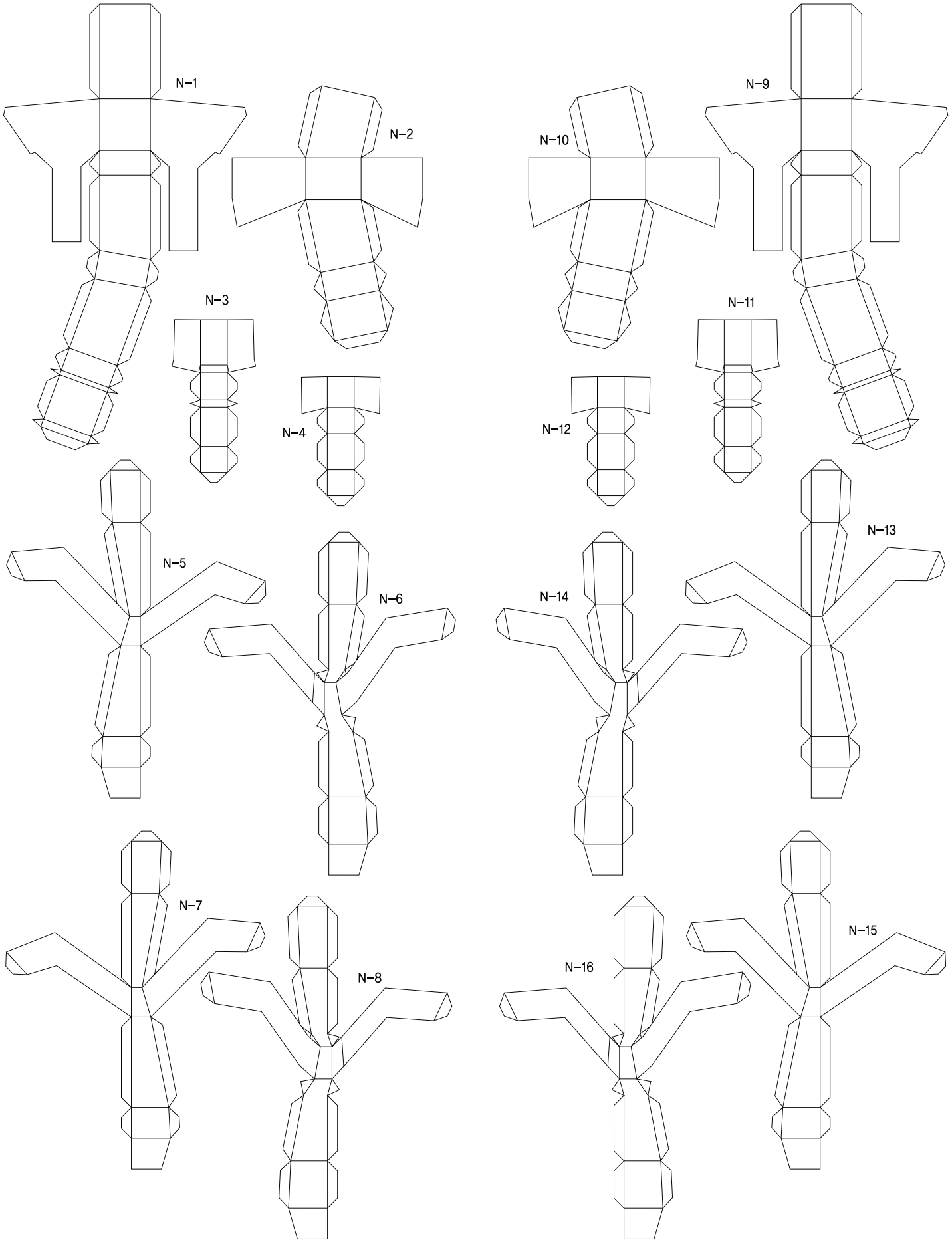

INFORMATION
1–30 R.ARM

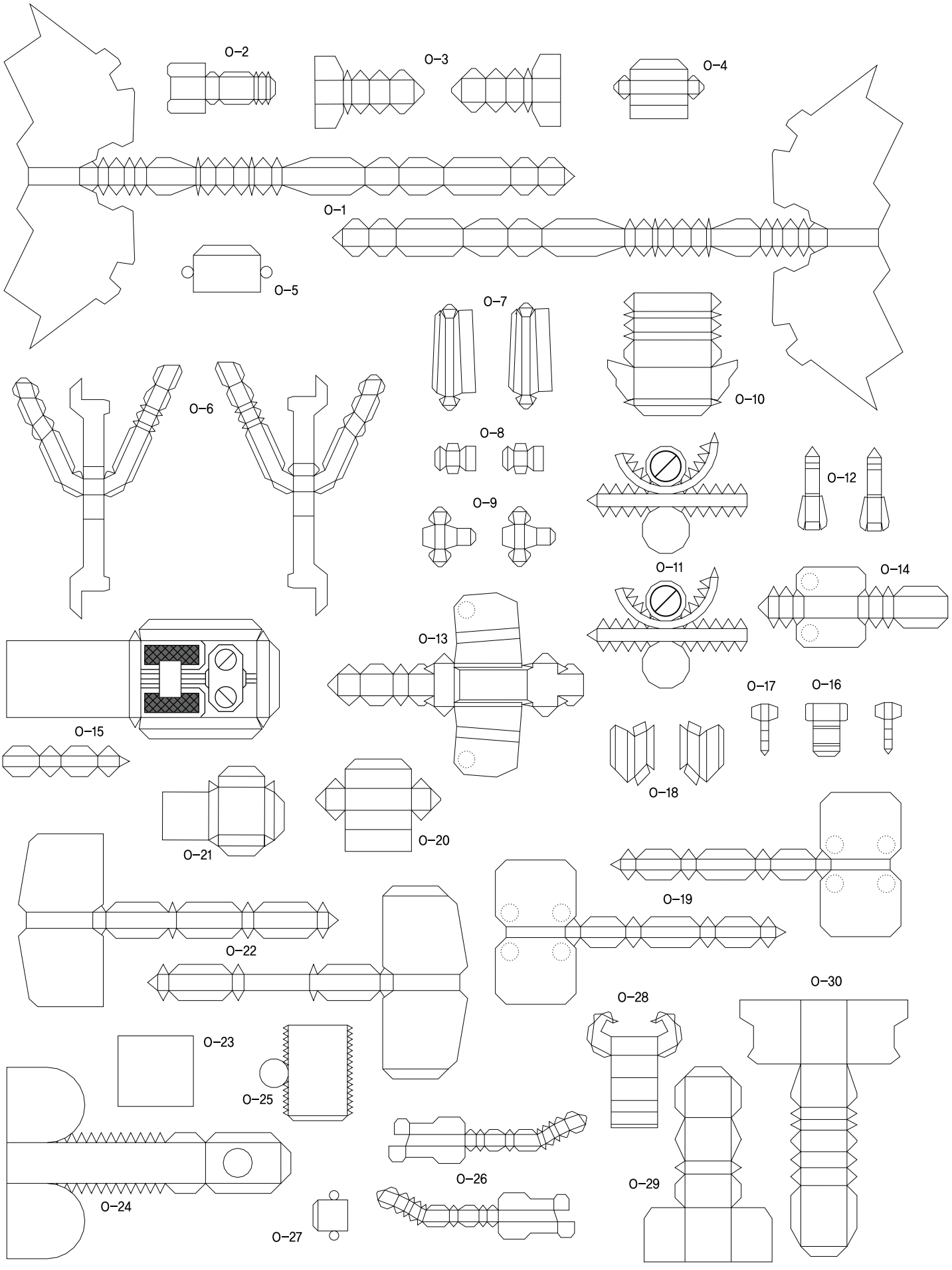

INFORMATION
1–30 L.ARM

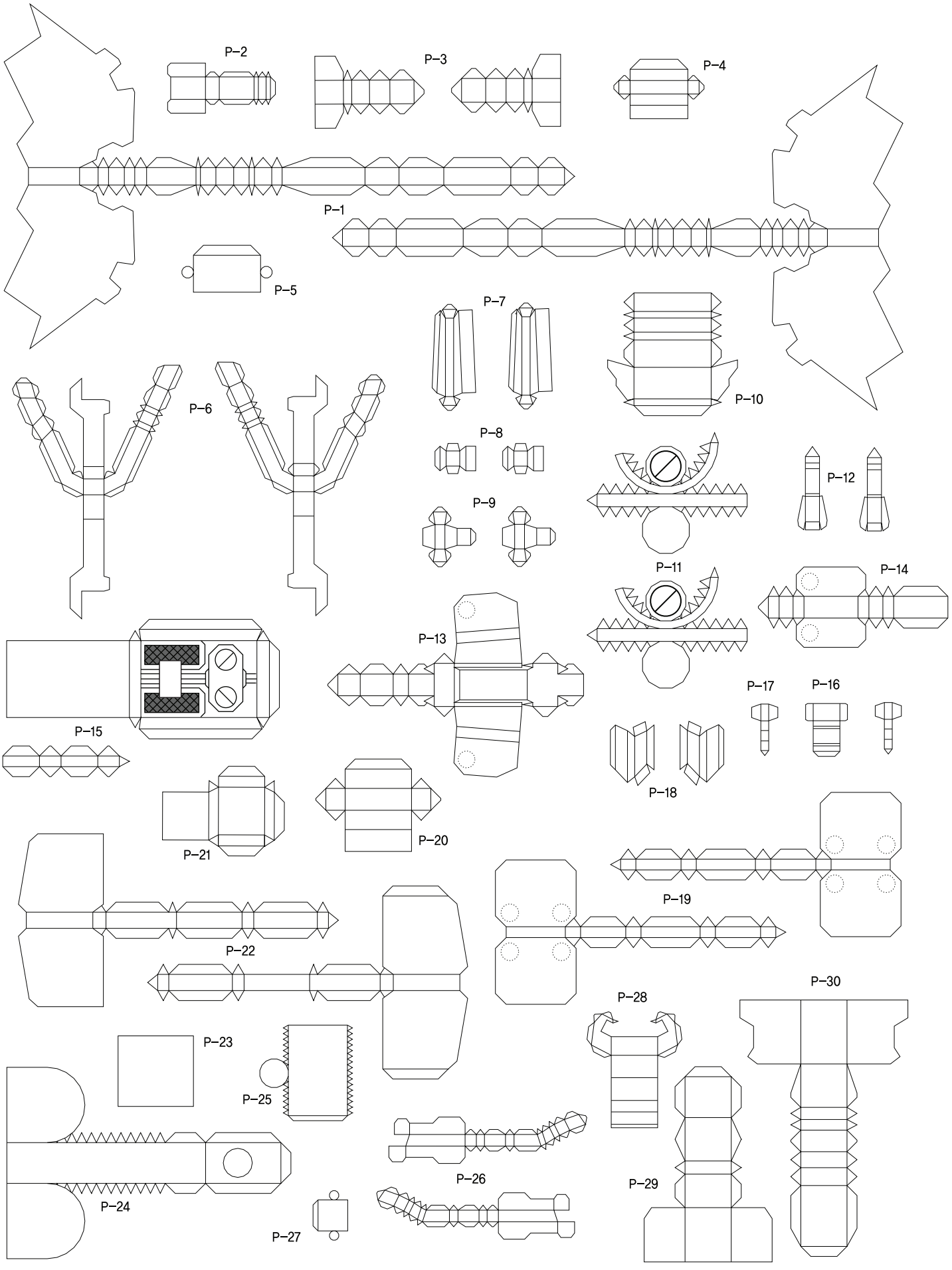

INFORMATION
1–3 HAND

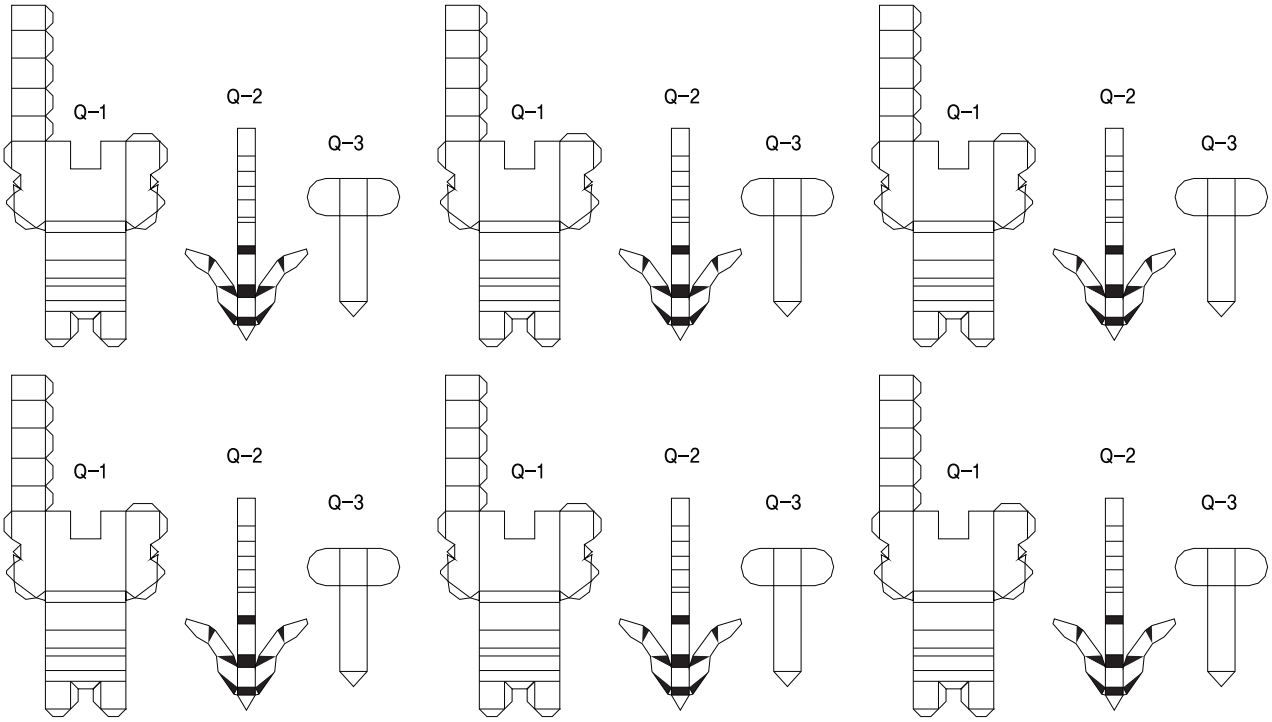


HAND_01

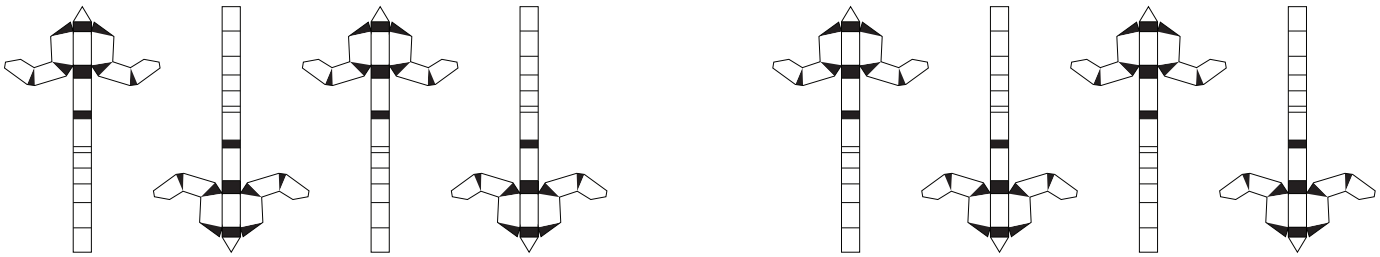

HAND_02




HAND_03

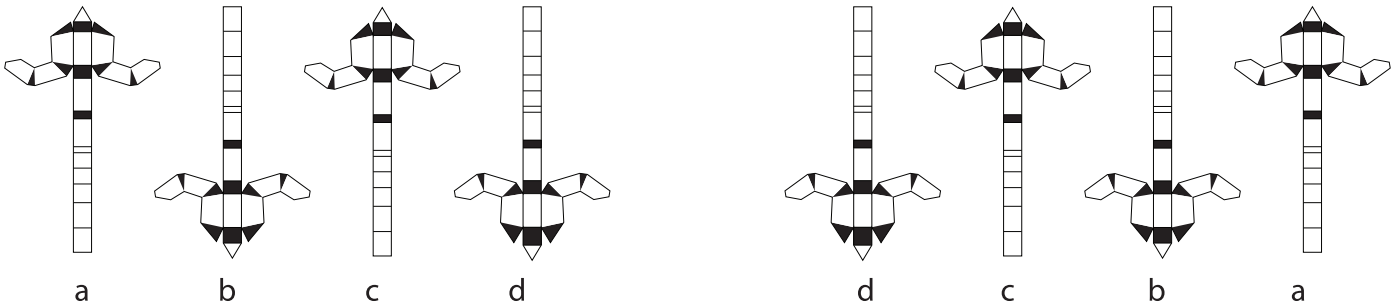

R blue

MODELING BY CREAM-BREAD /GAT-X105 STRIKE GUNDAM

| INFORMATION | |
|---|---|
| 1–27 | CHEST |
| 28 | PELVIS |

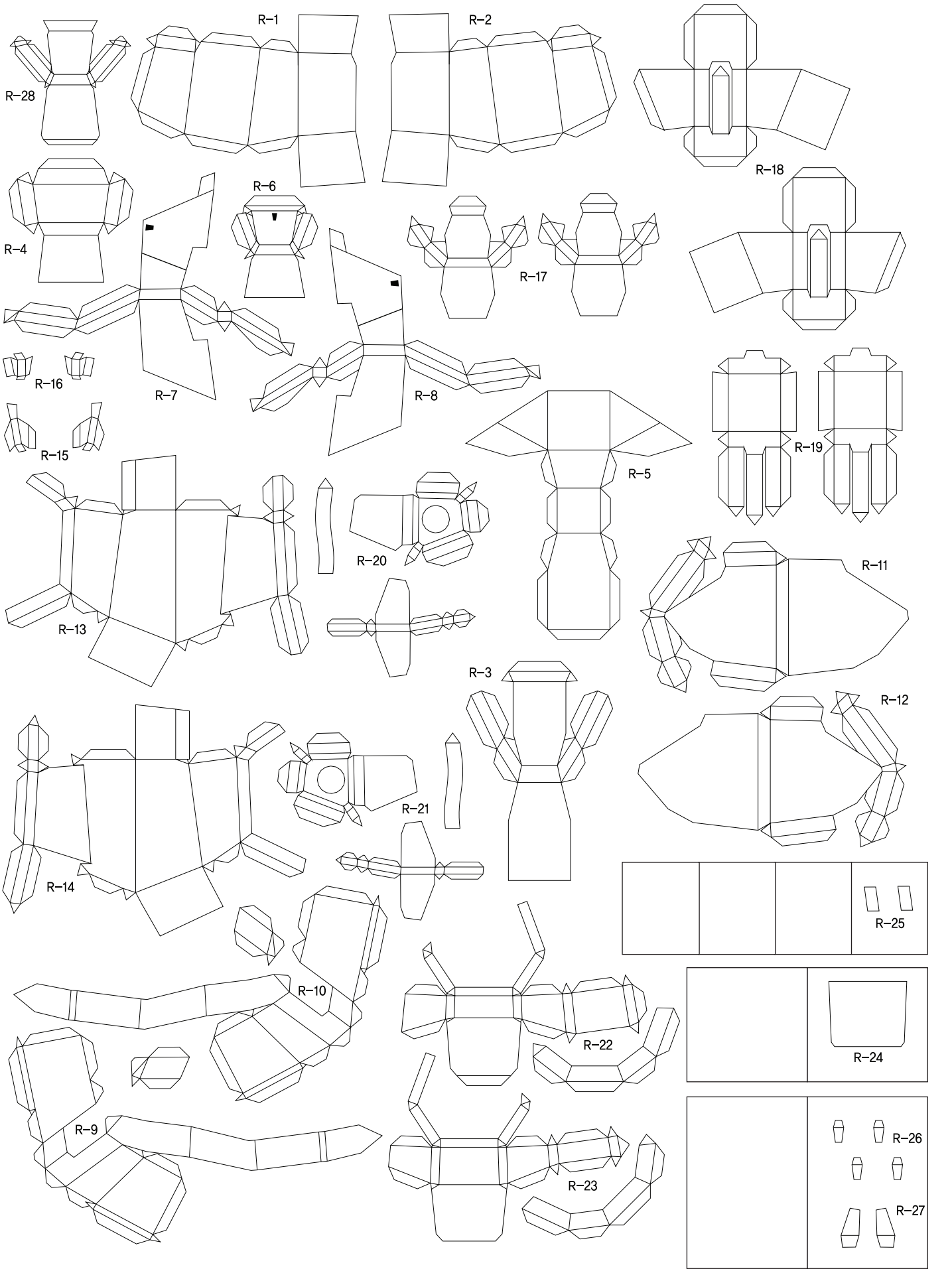

S red

MODELING BY CREAM-BREAD /GAT-X105 STRIKE GUNDAM

| INFORMATION | | | |
|---|---|---|---|
| 1–3 | HEAD | 8–13 | LEG |
| 4–7 | CHEST | | |

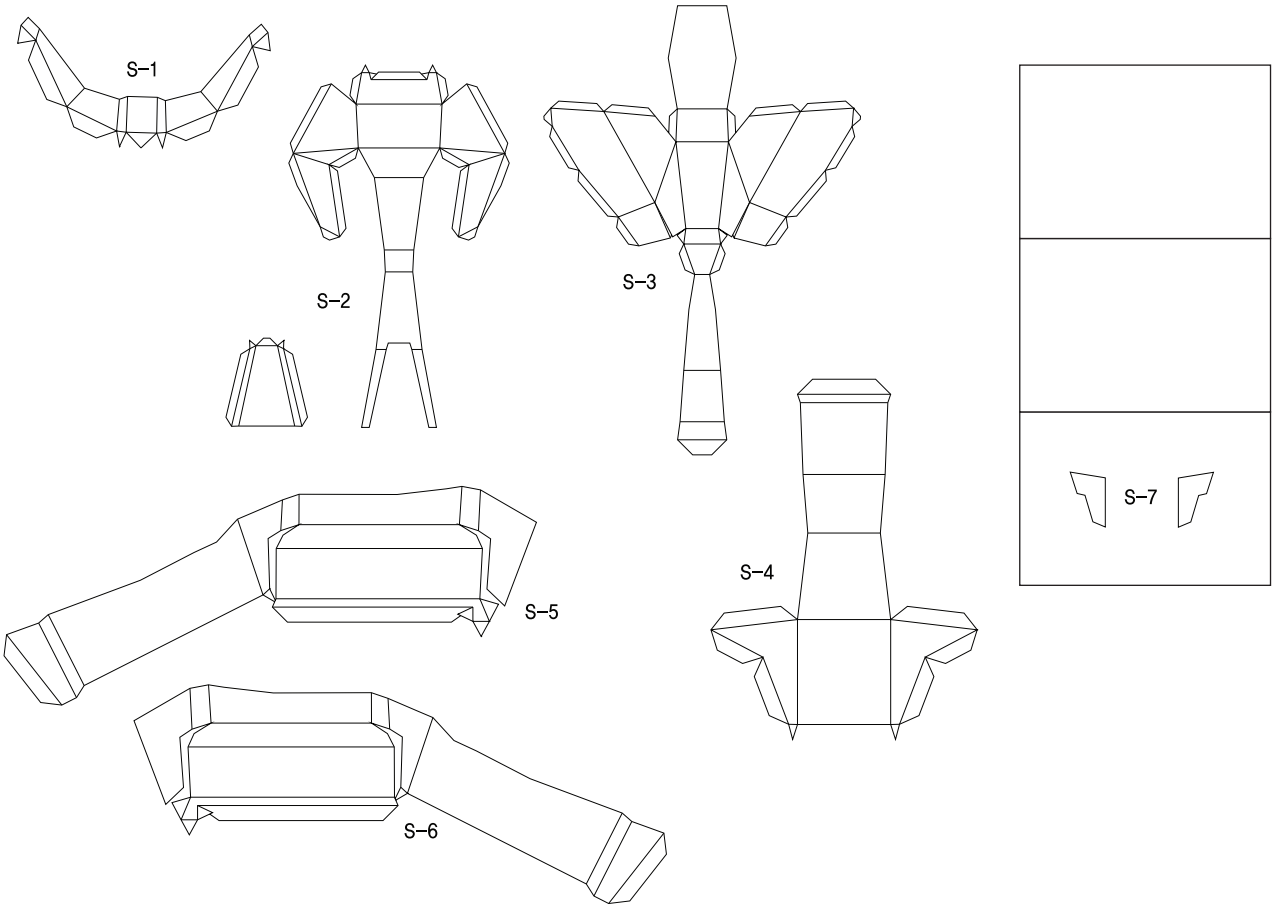


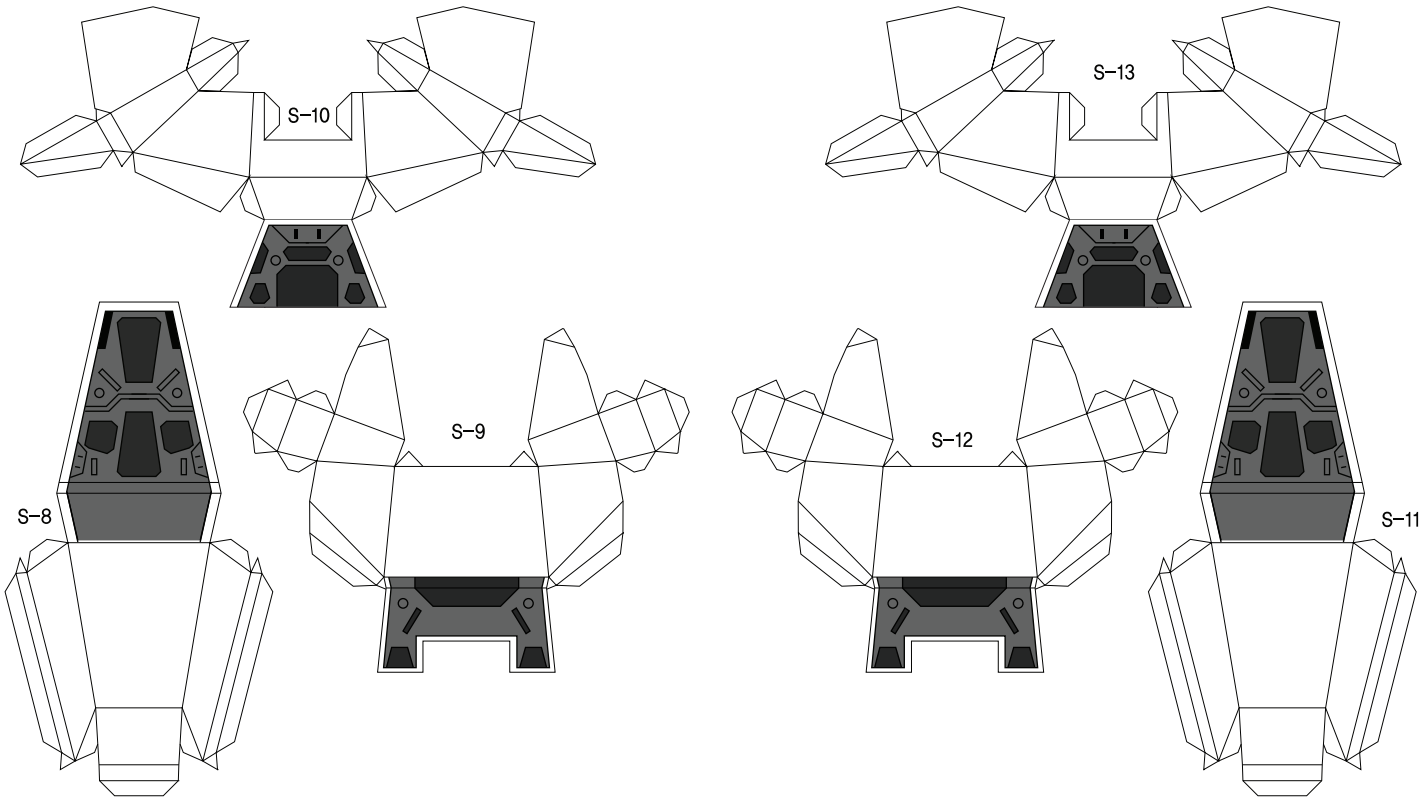

INFORMATION
1–3 HEAD

